HIGH SPEED DOME CAMERA
USER’S MANUAL

Table of Contents

Precautions.....2

Features.....3

Technical Data.....9

Installation Guide.....10

Dome Settings.....17

Operation Instructions.....20

1 Precaution

1. Please read this manual carefully before the installations and operations.

2. Transportation Security
No heavy stress, violent vibration or water splash are allowed during transportation, storage. The unit should be transported in separated packing. In shipments of distributor and delivery of maintenance, any damages caused by integral packing are not covered by warranty.

3. Installation
Avoid heavy stress and violent vibration during installation. Don’t touch the dome cover directly by hand. When connecting the power source, please follow all electric safety standards and only use the power supply designated for this device. Keep the video and control signal in a decent distance from high voltage devices and cable. Don’t apply power to dome before finishing the installation.

4. Internal Environment
Keep metal and inflammable material away from dome body to avoid fire short circuit and damage. Please prevent all liquids material from entering the dome. If this occurs, please shut down the power and pull out the plug-in. Then please inform the technical personnel immediately.

5. Electrical Safety
The video image would be interfered when the dome is installed near Television, radio transmitter, voltage changer and audio amplifier.

6. Camera Protection
Avoid shooting very bright objects directly into the camera’s CCD (such

As the sun or light fittings) and avoid fixating the camera lens on bright static object for long time, as it will cause Irreparable damage to the camera's CCD.

7. Cleaning Method
Please don't use abrasive and violent detergent to clean the dome. Please choose dry fabric and neutral detergent. And please use lens paper to clean the lens.

8. Internal removing, assembly, repair and operations should be only performed by qualified service personnel.

9. Please use our production under the following environmental standards:

Environmental Temperature	-35～60°C
Environmental Humidity	<95%
Barometric Pressure	86～106KPa
Power Supply	DC12V/4A

2 Features

2.1 Main Features

- Stepless speed changes, auto zoom/speed matching
- Pan 0.01~180°/S, Tilt 0.01°~150°/S, Preset: 600°/S (high speed dome)
- Auto object track with zoom in/out and motion detection (Auto Track Model)
- Timing actions for 7 days of programmable schedule
- Built-in Semi-conductor heater & digital temperature sensor
- PWM cooling fan vari-speed temperature control
- Reserved network interface and space for network module
- Pan Tilt accuracy +/- 0.1°, 256preset positions
- 8 cruising tracks, each cruising track has 32 presets

• 4 pattern tours,10 Mins memory, 500 programmable instructions
• Multi-Protocol through RS485 or coaxial cable.
• 8 auto scan with use-defined left and right boundaries and settable scan speed
• 8 Privacy Zones with defined English camera title
• Auto Compatible PELCO_P, PELCO_D compatible
• Guard Location: the dome will rotate back to preset position after a period of vacant time
• Alarm triggering: the alarm can trigger preset, auto scan, cruising and pattern tours functions
• Soft Address Function: the use can set up the dome address without uninstall the dome

2.2 Integrated Super Speed PTZ Rotator

• Delicate stepping motor, stable, sensitive and accurate
• 360° Pan and 90° Tilt range (auto-flip) without blind area
• Stepless speed change, auto zoom/speed matching

2.3 Built-in High Definition Day/Night Camera

• Auto iris, auto back light compensation
• Auto/manual white balance
• Auto/manual brightness control
• Auto/manual focus
• Multiple compatible camera brands including Sony, Samsung, LG, CNB, Sanyo etc.

2.4 All-weather Outdoor Design

• 6 Inch High die-cast alloy aluminum construction
• High Precision Mould with high heat conductivity
• Fully enclosed isolation design for heat sink
• Nanometer Dustproof, waterproof and fog-proof lens

• IP66 Waterproof

• 3000V lightning and surge current protection

2.5 Function Instructions

• Focus / PTZ Speed Auto Match

The pan/tilt rotation speed could be automatically adjusted according to the focus in/out, which makes it much more practical for manual target tracking. (Only for the auto tracking High speed dome)

• Auto Flip

When the camera tilts downward and goes just beyond the vertical position, the camera will rotate 180 degrees.

• Preset Position Set up and Call Up

In the Preset function the dome stores the current pan/tilt angle, zoom and other position parameters in its memory. When necessary the dome recalls these parameters and adjusts the camera to a particular position. The user can store, recall and clear the presets easily and promptly by using the keyboard controller. The dome can store up to 220 presets.

• Auto Scan

Users can set up the left and right boundaries by control keyboard. Then speed dome can scan between this boundary. It supports up to 8 groups of scanning paths.

• Cruising Track

The preset position can be programmed to be recalled in a set of sequences. This sequence can be set to let the camera scan from one position to the next in a cycle at a set speed. This feature is called the “auto cruise”. The cruise sequence and dwell time of each preset can be set. It supports up to 8 cruising tracks, each cruising track with 32 presets.

• Pattern Tour

Dome can memorize 600s running path or 500 programmable instructions. When start pattern tour, speed dome will move automatically according recorded action path. It supports 4 groups of pattern tours.

• Guard Location
The dome will automatically return to preset position if there is no operation in a period of vacant time.

• Default Action
When you start up the dome camera or do not send commands over a long time, the dome camera will return to its default functions which include the home place, auto pan, auto cruise and pattern.

• Dome Address Setup
The dome supports up to 256 addresses and the dome will only response to the instructions given to its own address. Please check the dip switch on the bottom of the dome for address setup.

• Manual Object Tracking
The use can move the joystick up, down, left or right to track the appearing object in the screen and use the joystick to zoom in and out with auto focus.

• Privacy Mask Protection
Set black mask areas to protect the privacy zones. The black privacy locations can be set, and support up to 8 mask zones.

• Timing Running Function
Users can set speed dome operation task at total 8 timing areas during 7 days.

• Coordinates and Directions Display
User can define the dome's direction of due north, which will help to show up the exact moving directions on screen. And zone title is supported to display when the dome moves to the specified zone.

• Auto Tracking (Only Auto Tack Model)
The dome will automatically fix and track the moving object according to the user's setup via OSD.

• Motion Detection
The dome will detect the changes in the defined video zone and trigger alarm. It supports to 8 video Locations, each with 4 detection zones.

• PTZ and Lens Control

1) Zoom Control
Users can control zoom by keyboard to get near or far images.

2) Focus Control
The default setting is auto focus. The camera will auto focus based on the center of the video display to get the clear image. In some special occasions, the user could do the manual focus to get the desired image effect.

3) Auto Iris Control
Auto Iris is aiming to detect the environmental lights condition and adjust the iris to get the stabilized brightness of the image.

4) Auto Back Light Compensation
In the highly bright background, auto back light compensation is aiming to compensate the brightness of the dark object and adjust the background brightness to get a clear image.

5) Auto/Manual White Balance
Auto/Manual WB adjust depending on the environment light changes.

6) Day and Night Switch (Only for Day/Nigh Camera)
Speed dome camera can auto switch according to the environmental illumination changes.

7) OSD Setup (Only for camera with menu)
Call upon preset No.95 to enter into OSD menu setup interface. Press “Focus” to choose menu items and press “Iris” to set menu contents.

3 Technical Specifications

Power Supply	DC12V±10% 30W
Manual Speed	Pan 0.01°~180°, Tilt 0.01°~150°
Preset Speed	600 °/S
Pan Angle	360° continuous pan rotation
Tilt Angle	90°(Auto Flip)
Presets Positions	256
Preset Accuracy	+/-0.1°
Auto Scan	8 auto scan tracks, user-defined left and right boundaries and scan speed
Auto Cruising	8 cruising tracks, each cruising tracks has 32 preset positions, user-defined dwell time
Pattern Tour	4 groups, each one with 10 Mins memory, 500 programmable instructions
Guard Location	The dome will rotate back to preset position after a period of vacant time.
Data Communication	RS-485
Protocols	Auto Compatible PELCO_P, PELCO_D
Camera Module	Auto Compatible SONY,LG,Samsung,CNB,HITACH,etc.
Baud Rate	2400/4800/9600bps
Operating Humidity	0~90%
Operating Temp	-35°~ +60°C

4 Installation Guide

4.1 Preparations

1) Basic Requirements

All the electric work must be finished under the latest electric & fire prevention law and rules (and any related law and rules). Please check according to the packing list if every accessory is included. And also make sure the installation is operated as required. Please contact us for any help during the installation.

2) Installation Space and Density Checkup

Please make sure the space is big enough to install our dome. And also ensure the density of the ceilings or walls to hold total weight of the dome and its accessories.

3) Cables Preparation

Please choose the proper cable according to the transmission distance. The min requirement of coaxial BNC cable is listed as follows for reference:

Models	Max Distance（Feet\Meter）
RG59/U	750ft(229m)
RG6//U	1,000ft(305m)
RG11/U	1,500ft(457m)

4) Setup Dip Switch for Dome Address

*Please turn to Part 5 for details.

4.2 Installation Method

The High speed dome could be installed in wall-mount and pedant-mount

Wall-mount Structure Diagram

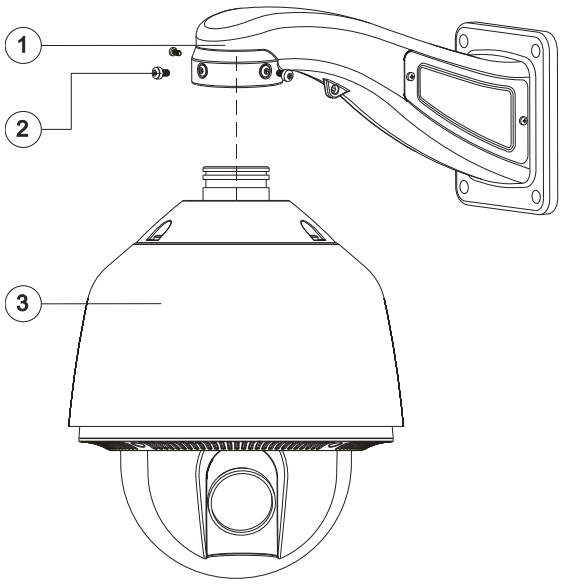

Pendant-mount Structure Diagram

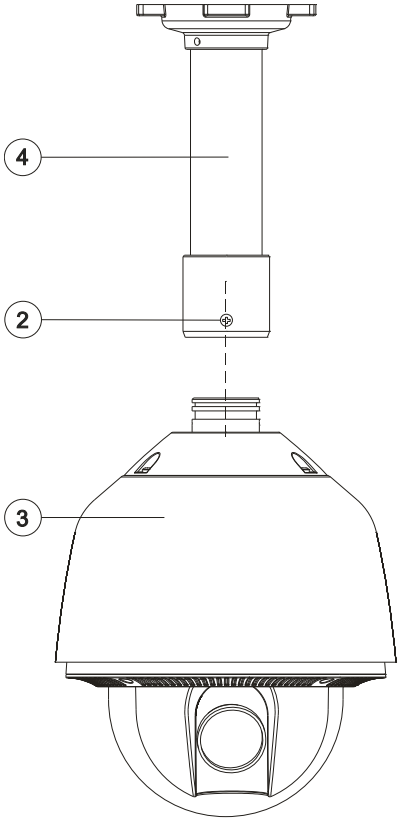

①—Wall Mount Bracket
②—Installation Screws (M5X8)
③—IR Dome Body
④—Pedant Mount Bracket

4.3 Installation Dimensions

Wall Mount

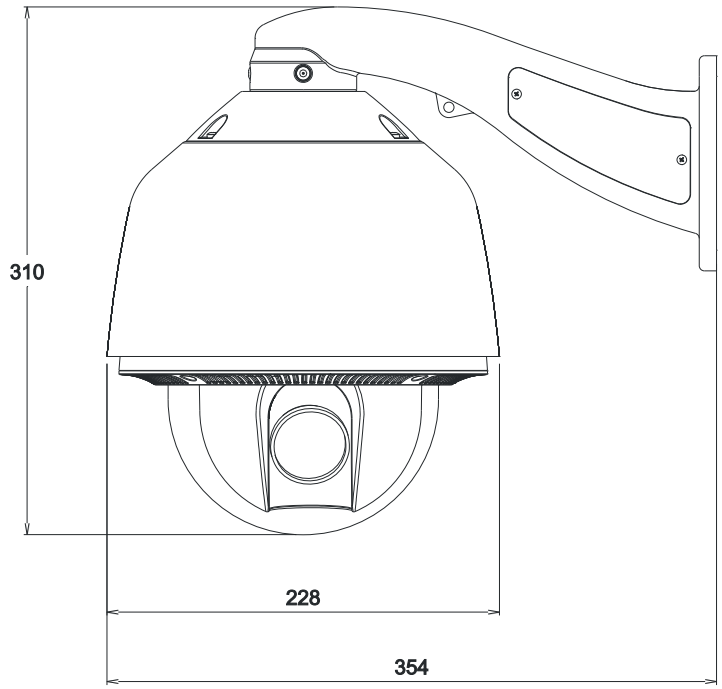

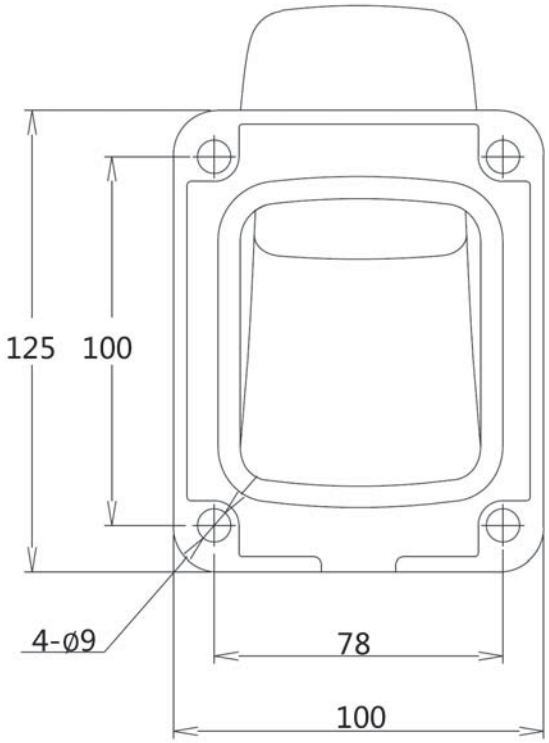

Pendant Mount

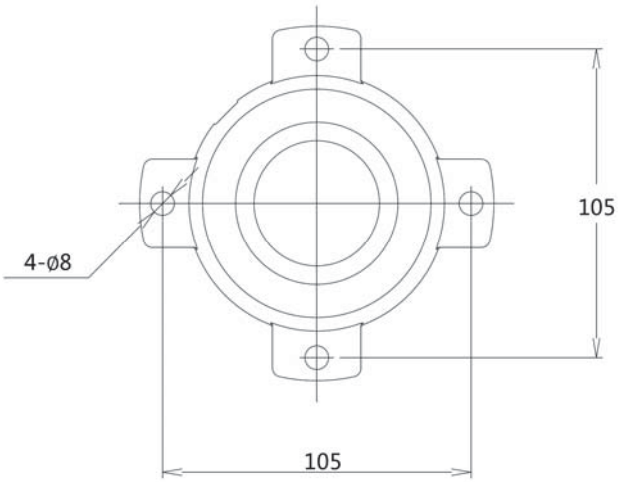

4.4 Installation Procedures

*Notice: The wall and ceiling must be thick enough to install the expansion bolts and can bear 4 times the weight of the dome camera itself.

Wall-mount Installation Procedures:
1) Take out the bracket from the package (as shown), mark the installation hole positions on the wall referencing to the bottom of bracket.

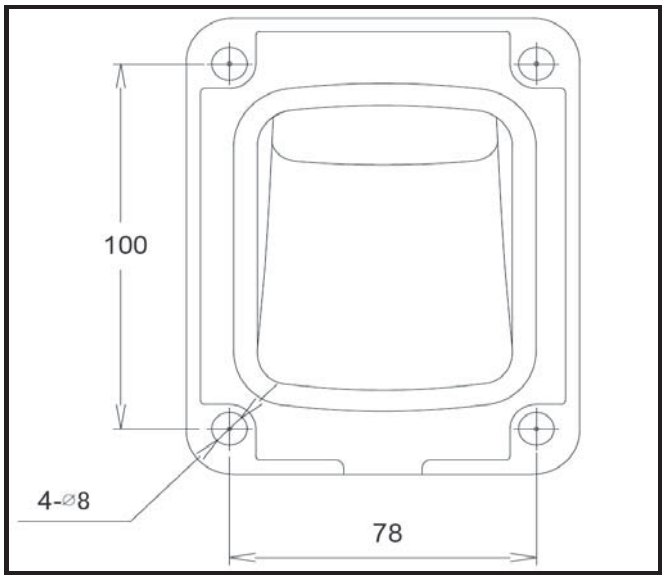

2) Drill the hole and install 4 pieces of M8 expansion bolt into the hole.

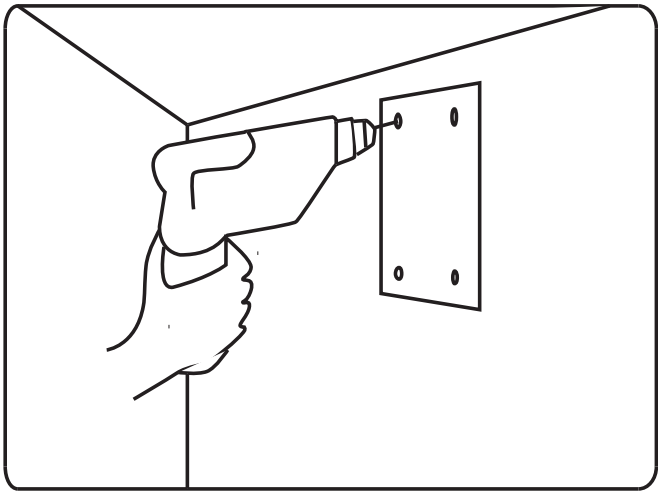

3) Take out the High speed dome and put the cables through the bracket.
Use M5 screws to fix the bracket and dome body.

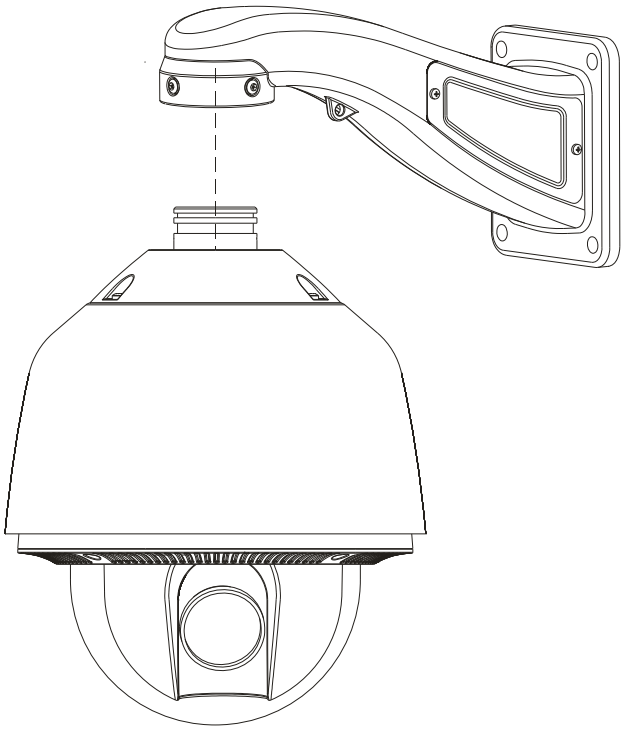

4) Use 4 pieces of M8 screw nuts with washer to fix the bracket on the wall.

Pendant-mount Installation Procedures:

1) Take out the bracket from the package (as shown), mark the installation hole positions on the ceiling referencing to the bottom of bracket.

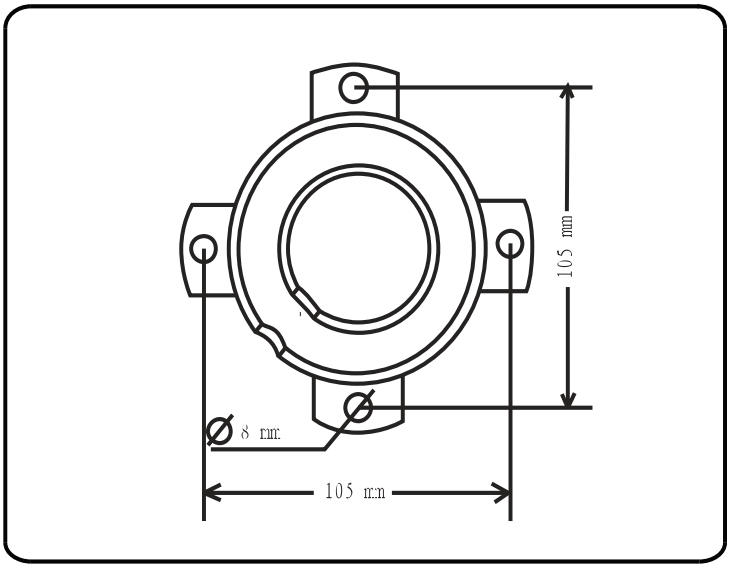

2) Drill the hole and install 4 pieces of M8 expansion bolt into the hole.

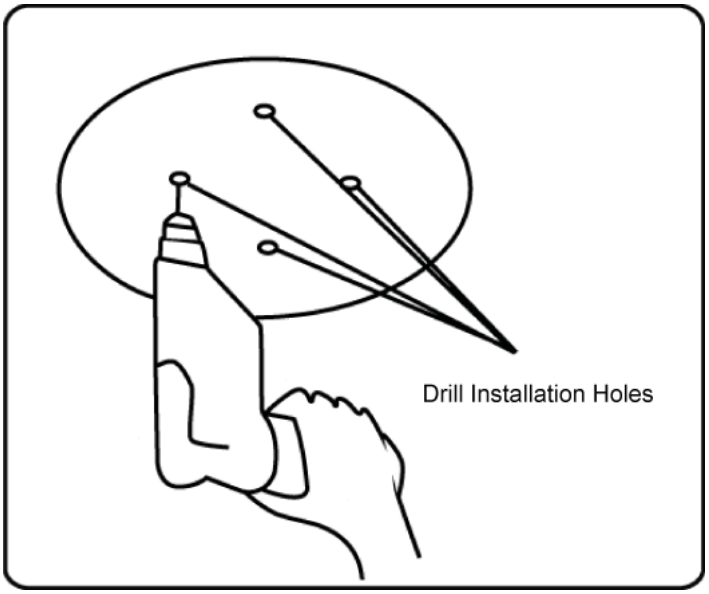

3) Take out the High speed dome and put the cables through the sockets on the bottom of the pendant bracket. Use M5 screws to fix the bracket and dome body.

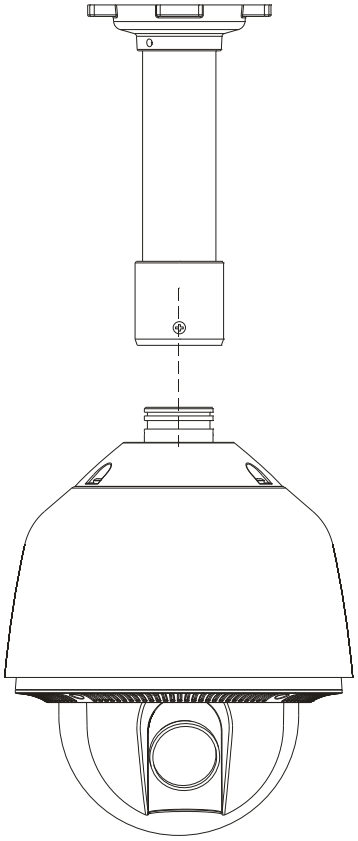

4) Use screw nuts with washer to fix the bracket on the wall.

Notice: Pendant-bracket is not designed for outdoor installation. If specially required, please do make sure the waterproof installation of the dome.

5 Dome Setting

Before the dome is installed, please finish the setup of the communication protocol, baud rate and dome address. Set the DIP switch inside the dome body. The relative DIP switch site and connecting wires are diagramed below for reference.

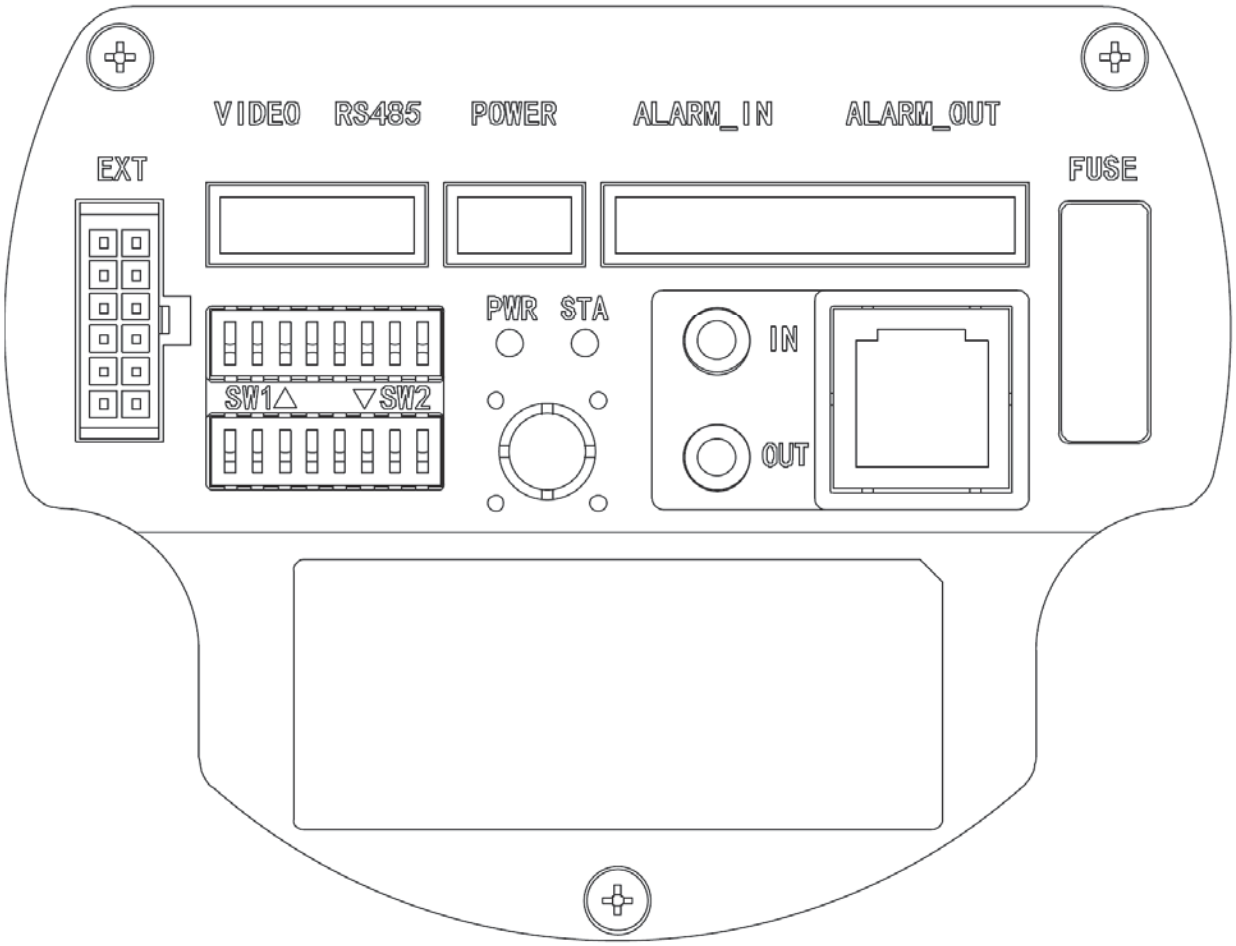

SW1— Dip switch for the dome address
SW2— Dip switch for the dome protocol

1) Protocol Setup

Our High speed dome supports three protocols including Pelco P, Pelco D and HS. All of them supports baud rate of 9600bps、4800bps、2400bps.

Set the No.1~4 dip switch for the protocol configuration.

Protocol	SW2-1	SW2-2	SW2-3	SW2-4
HS	OFF	OFF	OFF	OFF
PELCO P	ON	OFF	OFF	OFF
PELCO D	OFF	ON	OFF	OFF
Reserved	…	…	…	…

2) Baud Rate Setup

Set the No.5~6 dip switch for the baud rate configuration.

Baud Rate	SW2-5	SW2-6
9600	OFF	OFF
4800	ON	OFF
2400	OFF	ON
Reserved	…	…

3) Dome Address Setup

PELCO-P & PELCO-D Protocol

Add	SW-1	SW1-2	SW1-3	SW1-4	SW1-5	SW1-6	SW1-7	SW1-8
1	1	0	0	0	0	0	0	0
2	0	1	0	0	0	0	0	0

3	1	1	0	0	0	0	0	0
4	0	0	1	0	0	0	0	0
5	1	0	1	0	0	0	0	0
6	0	1	1	0	0	0	0	0
7	1	1	1	0	0	0	0	0
8	0	0	0	1	0	0	0	0
9	1	0	0	1	0	0	0	0
10	0	1	0	1	0	0	0	0
11	1	1	0	1	0	0	0	0
12	0	0	1	1	0	0	0	0
13	1	0	1	1	0	0	0	0
14	0	1	1	1	0	0	0	0
15	1	1	1	1	0	0	0	0
16	0	0	0	0	1	0	0	0
17	1	0	0	0	1	0	0	0
18	0	1	0	0	1	0	0	0
19	1	1	0	0	1	0	0	0
20	0	0	1	0	1	0	0	0
21	1	0	1	0	1	0	0	0
22	0	1	1	0	1	0	0	0
23	1	1	1	0	1	0	0	0
24	0	0	0	1	1	0	0	0
25	1	0	0	1	1	0	0	0
26	0	1	0	1	1	0	0	0
27	1	1	0	1	1	0	0	0
28	0	0	1	1	1	0	0	0
29	1	0	1	1	1	0	0	0
30	0	1	1	1	1	0	0	0
31	1	1	1	1	1	0	0	0
32	0	0	0	0	0	1	0	0
…	…	…	…	…	…	…	…	…
253	1	0	1	1	1	1	1	1
254	0	1	1	1	1	1	1	1

4) Cable Definition

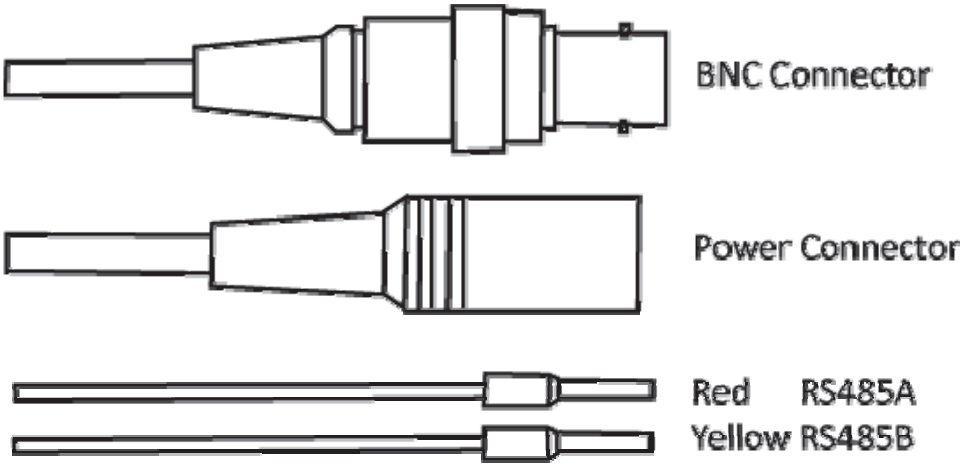

BNC Connector: Video Coaxial Cable
Power Connector: DC12V
Red: RS485A
Yellow: RS485B

Operation Instructions

1) Main Functions Fast Call Up

Our High speed dome supports 256 preset positions. You can activate some special functions by calling upon code number 65-99.

Serial No.	Command	Fast Call Up	Note
1	Start Auto Scan	Call 99	Default to start auto scan of group No.1
2	Start Auto Cruise	Call 98	Default to start auto cruise of group No.1
3	Start Pattern Tour	Call 97	Default to start pattern tour of group No.1
4	Start Auto Scan of Group No.	Call 80+ Call pp+ Call 99	pp means：Group No.1-8
5	Start Auto Cruise of Group No.	Call 80+ Call pp+ Call 98	
6	Start Pattern Tour of Group No.	Call 80+ Call pp+ Call 97	pp means：Group No.1-4

7	Stop Auto Mode/End up Setting	Call 96	
8	Open OSD Menu	Set 95（or Call 95）	
9	Remote Reset	Call 94	
10	Recover Factory Default	Call 82	

2) System Self-Testing

The dome will do self-testing after power up, and system status will show "Normal" if system Is running normally. If error happens, testing result will be shown in "○" or "X". "○" means normal and "X" means error. Please check the according meaning as follows:

Serial No.	1	2	3	4	5	6
Meaning	Dip Switch	Temperature Sensor	Storage	Pan	Tilt	Camera

3) OSD Menu Operations

Call Preset 95 to enter the main OSD menu (or call preset No.1 two times continuously within two seconds)

Control the joystick to move the cursor around the menu

Press "Iris Open" to enter the menu for selections

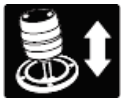
Move the joystick up and down to select the item

Press "Iris Open" to confirm the selection

Press "Iris Close" to cancel the selection

*Note: If your controller does not have a joystick, use the up or down key.

4) OSD Menu Functions

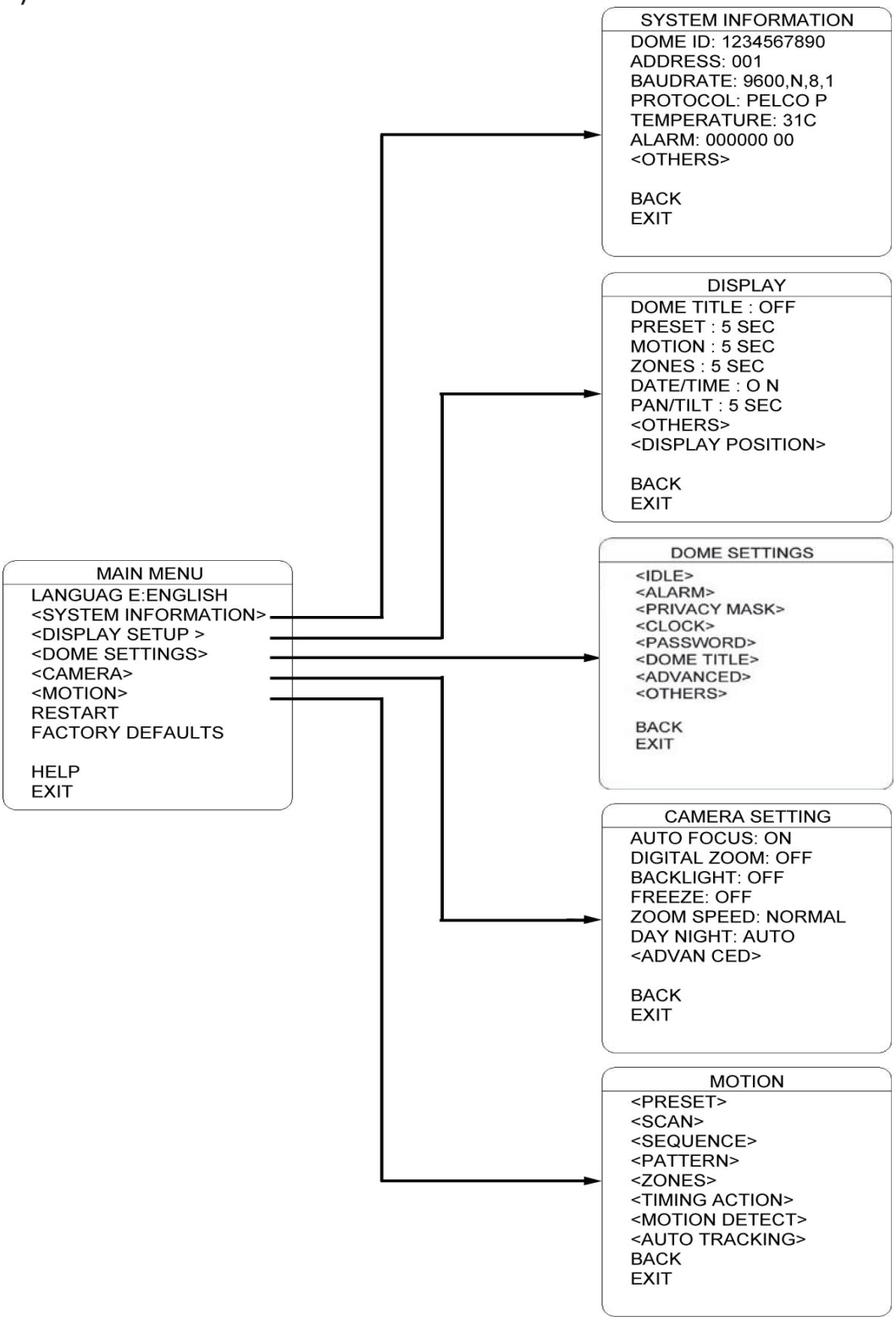

LANGUAGE

The language for the on-screen menus is Selectable.

To change the display language:

Press Iris Open to enter selection.
All on-screen menus are changed to the selected language.

SYSTEM INFORMATION

The user can check the dome system information as required. The system information includes: Dome ID, dome address, baud rate, protocol, temperature, voltage, alarm info, dome title, version, date, time, and temperature scale.

Use the following steps to display the System Information screens:

1. Use the joystick to position the cursor along the SYSTEM INFORMATION.
2. Press Iris Open. The SYSTEM INFORMATION screen opens.
3. Mover the joystick up and town to select the item.
4. Press Iris Open to enter the setup of each item.

DISPLAY SETUP

```
MAIN MENU
   LANGUAG E:ENGLISH
   <SYSTEM INFORMATION>
☞  <DISPLAY SETUP >
   <DOME SETTINGS>
   <CAMERA>
   <MOTION>
   RESTART
   FACTORY DEFAULTS
   HELP
   EXIT
```

↓

```
DISPLAY
   DOME TITLE : OFF
   PRESET : 5 SEC
   MOTION : 5 SEC
   ZONES : 5 SEC
   DATE/TIME : O N
   PAN/TILT : 5 SEC
☞  <OTHERS>
   <DISPLAY POSITION>
   BACK
   EXIT
```

↓

```
DISPLAY
   ALARM : 5 SEC
   PROMPT :ON

   BACK
   EXIT
```

↓

```
DISPLAY POSITION
   <DATE/TIME>
   <DOME TITLE>
   <ZONES>
   <MOTION>
   <ALARM>
   <PAN/TILT>

   BACK
   EXIT
```

Display setup allows the user to define the way to display the dome titles on the monitor.

The displayed titles are listed as follows:

DOME TITLE	Indicate dome
PRESET	Indicate the dwell time for preset title
MOTION	Indicate the dwell time for auto function titles (auto scan/auto cruise/pattern tour)
ZONES	Indicate the dwell time for zone titles
DATE/TIME	Display the current date and time
PAN/TILT	Time to display PTZ info and zoom info
ALARM	Time to display alarm in/out info
PROMPT	Display prompt info

Two options for the Dome Title and Date/Time: OFF and ON
Other setup selections include:

OFF	Title will not be displayed when activated.
ON	Title will be continuously displayed when activated.
2 SEC	Title will be displayed for 2 seconds after activation.
5 SEC	Title will be displayed for 5 seconds after activation.
10 SEC	Title will be displayed for 5 seconds after activation.

Move the cursor by joystick to the one you need to set, and press Iris Open to enter the item. Move the joystick select the status and press Iris Open to confirm.

Titles can be placed anywhere on the monitor. This feature allows you to customize the window of your monitor screen. To set a title position:

1. Use the joystick to position the cursor in the DISPLAY POSITION
2. Press Iris Open.
3. Use the joystick to move the title up, down, left, or right.
4. Press Iris Open.
5. Repeat steps 1 through 4 to position other titles
6. Position the cursor at BACK or EXIT. Press Iris Open to save settings and exit menu.

IDLE

IDLE setting means if there is no command for the dome for a period of time, the dome will run the actions as defined.

1) TIME: Move the cursor to “TIME” and press IRIS OPEN to enter, and move the joystick up and dome to select among 30 sec, 1 min, 5 min, 10 min and 30 min. And press IRIS OPEN to confirm.

2) ACTION: Move the cursor to “ACTION” and press IRIS OPEN to enter. Move the joystick to select the actions including” NONE, PRESET, SCAN, SEQUENCE, PATTERN. Press IRIS OPEN to confirm.

3) ALARM

The dome system has 2alarm inputs and 1 alarm output. (optional function). When an alarm is received, an input signal to the dome triggers the user defined action (such as presets, patterns, etc.), and at meantime the alarm output signals is activated.

ALARM NO.: Move the cursor to the ALARM NO. Press IRIS OPEN to enter and move the joystick up and down to select the alarm input no. (Channel 1 and Channel 2)

INPUT STATE：Set the alarm contact status. There are two input states, OPEN and CLOSE.

OPEN normally open
CLOSE normally close

ALARM MODE
OFF Alarm function is deactivated.
ON Alarm function is activated.
AUTO AUTO Alarm function will be activated and deactivated between START TIME and STOP TIME.

ACTION: Set the alarm action:

NONE (default) No action.
PRESET Dome goes to preset. (Default as Preset 1)
SCAN Dome starts auto scan (Default as Auto Scan 1)
SEQ Dome runs auto cruise (Default as Auto Cruise 1)
PATTERN Dome runs pattern (Default as Pattern 1)

ALARM OUT: Set the auxiliary to activate:
OFF Not alarm output will be activated.
OUT1 An alarm action will close AUX 1 output..
OUT2 An alarm action will activate AUX2 output.

RESET TIME: Set up time for the alarm output (such as an alarm buzzed) when is triggered by the detector. .

START /STOP TIME: Set up the time to start alarm and stop alarm ONLY under the AUTO mode under ALARM MODE.

PRIVACY MASK

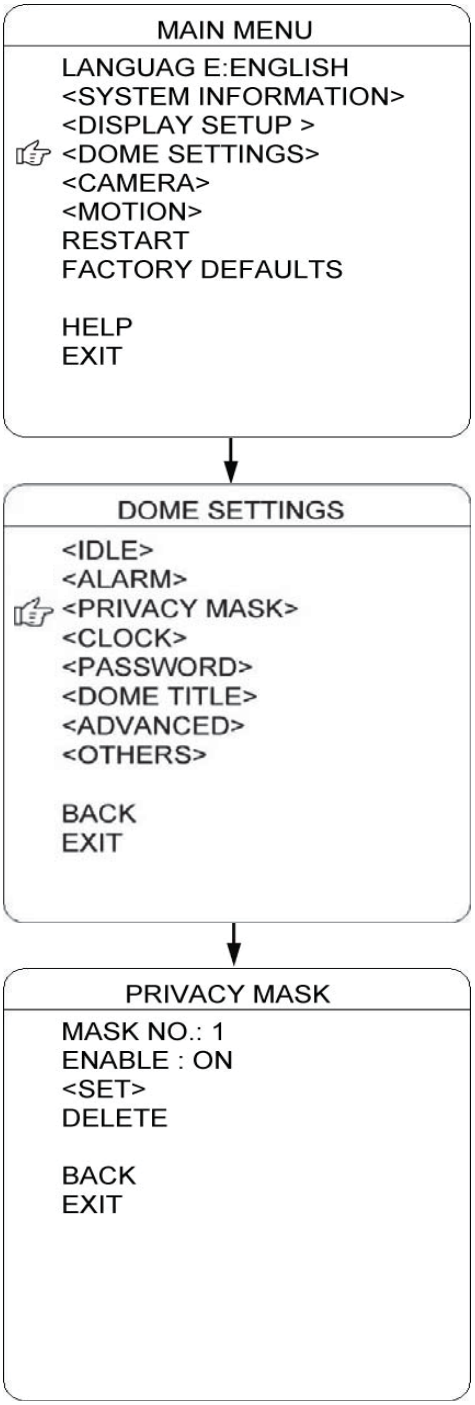

Privacy mask allows the user to mask the privacy areas with black frame. The user can set up 8 privacy masks at most.

MASK NO.: Move the cursor here and press IRIS OPEN to enter the setup of Mask Number of the privacy zone,

ENABLE: To enable or disable this privacy mask function.

SET: Move the cursor here and press IRIS OPEN to enter the mode of setting the privacy mask. Move the joystick (Left/Right/Up/Down) on the screen to set up the privacy zone and press IRIS OPEN to confirm.

DELETE: Move the cursor here and press IRIS OPEN to delete the current No. of privacy mask zone.

CLOCK

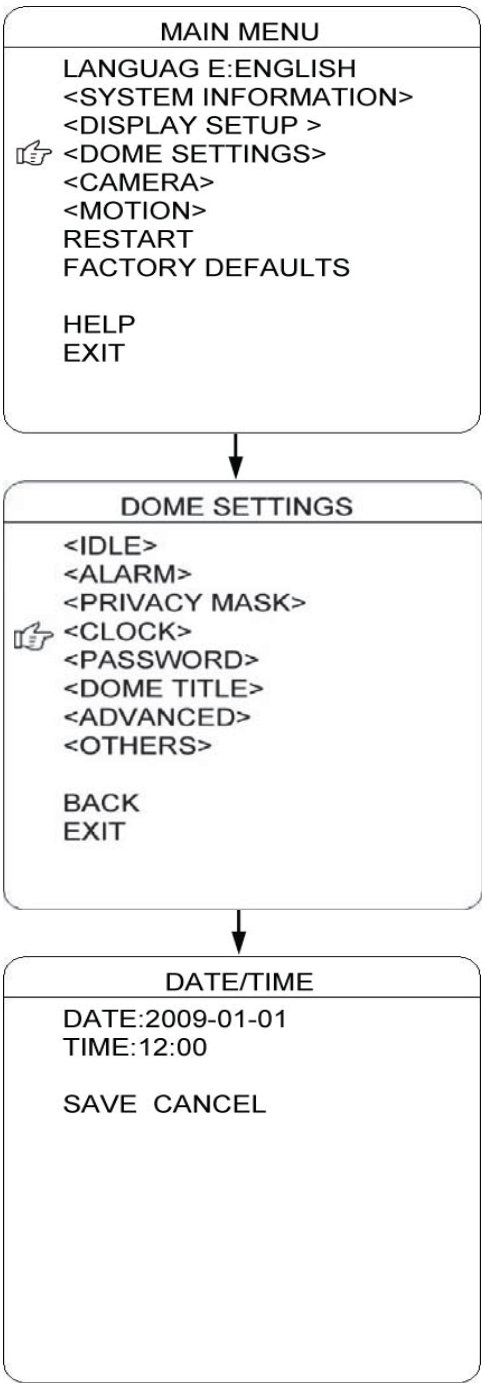

The dome can display the data and time. And the user could enter this CLOCK menu to set up the DATE and TIME.

DATE: Move the cursor here and press IRIS OPEN to enter. Move the joystick left and right to choose the date position and move it up and dome to adjust the figures. Press IRIS OPEN to confirm.

TIME: Move the cursor here and press IRIS OPEN to enter. Move the joystick left and right to choose the time position and move it up and dome to adjust the figures. Press IRIS OPEN to confirm.

SAVE/CANCEL: Move the cursor to “SAVE” and press IRIS OPEN to save the settings. Move the cursor to “DELETE” and press IRIS OPEN to cancel the settings.

PASSWORD

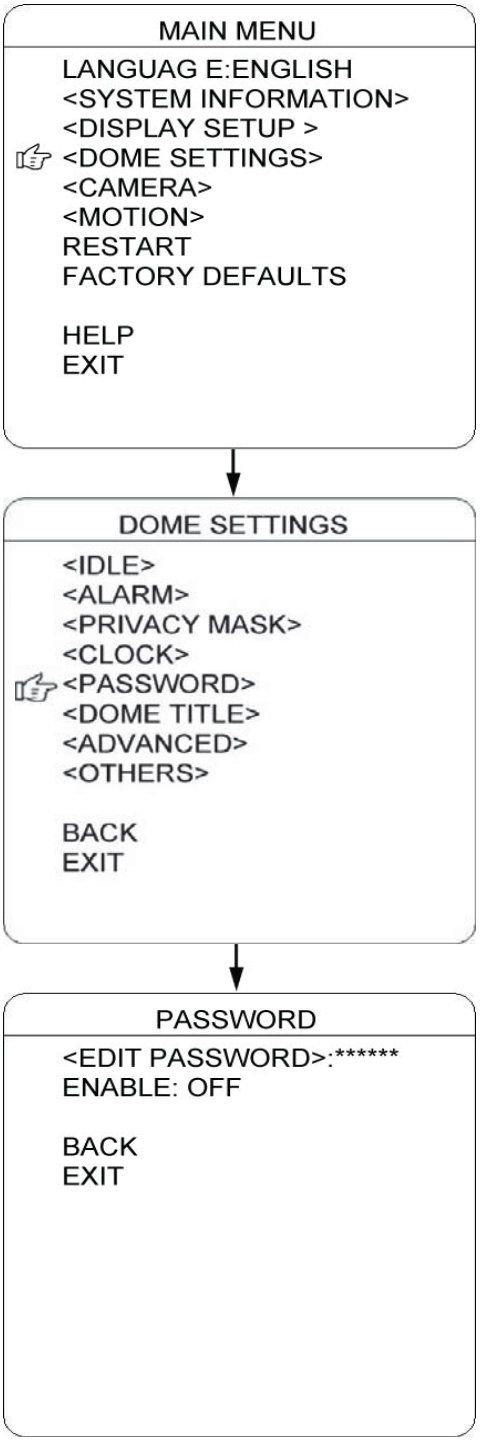

The dome features password protection function to prevent unanthorized changes to the dome settings. If the PASSWORD function is enabled, the operator can not access any dome setting without entering a valid password.

EDIT PASSWORD: Move the cursor here and press IRIS OPEN to enter. Please under the old password before set up the new password. The initial password is “111111”

ENABLE: Move the cursor here and press IRIS OPEN to enter. Move the joystick to select between “ON” and “OFF” . The user need to enter the password when opening the OSD under the status of “ENABLE: ON”.

DOME TITLE

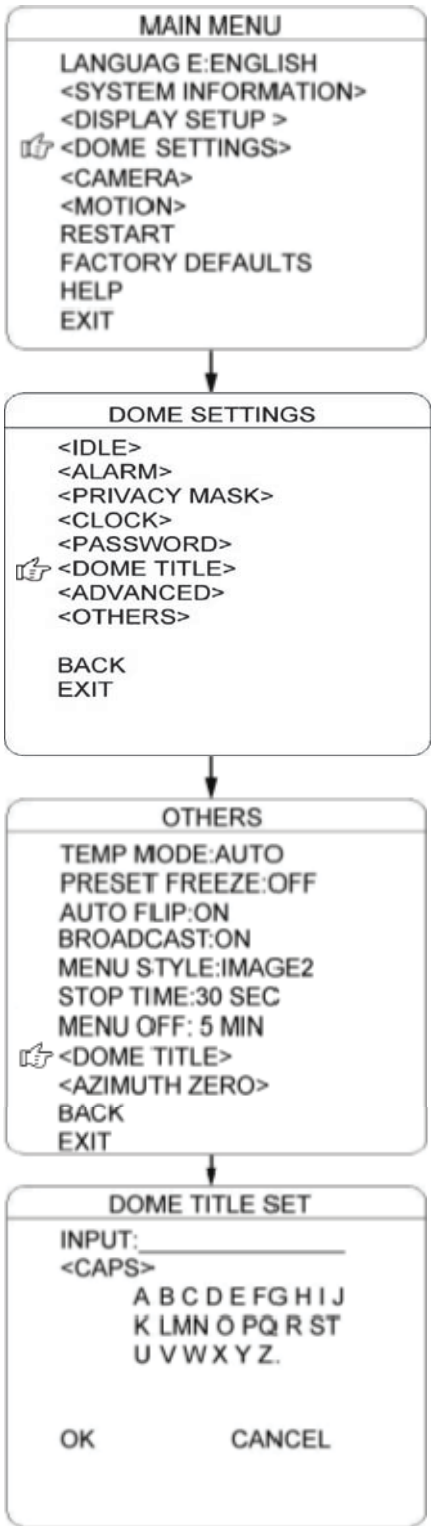

The user can set up the dome title to define each camera. Dome title support up to 12 characters.

Move the cursor according the left steps and select INPUT. Press IRIS OPEN to enter.

1) Move the joystick left and right to position "←", and press IRIS OPEN to delete the character at"←". Press IRIS CLOSE to exit the edit mode.

4) Move the cursor to "<CAP>" and press IRIS OPEN to enter. Move the joystick up and down to select the input method (such as English Cap, English, Chinese, Figures, and Symbols)

5) Move the cursor to next line of <CAP> and press IRIS OPEN to enter the mode of character input. The selected character will be shown in high brightness. Move the joystick up/down/left/right to choose the needed characters. Press IRIS OPEN to move the selected character to the INPUT position at"←".

6) After finishing the character inputs, move the cursor to "OK" and press IRIS OPEN to confirm.

7) Also user can move the cursor to "CANCEL" to cancel the character input settings.

SOFT ADDRESS SET

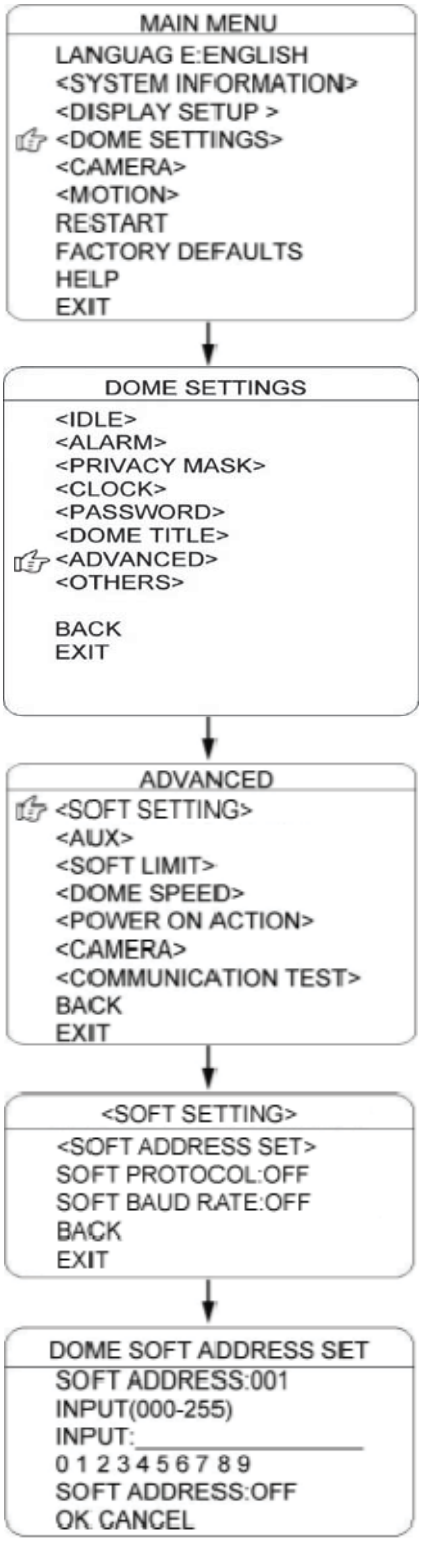

The use can set up the SOFT ADDRESS, SOFT PROTOCOL and SOFT BAUD RATE under this menu here to activate the soft address function. And then the defined dome address by dip switch will be disabled.

1) Move the cursor to INPUT (under DOME ID) and press IRIS OPEN to enter the mode of setting dome ID, Move the joystick to position the cursor beside :0 1 2 3 4 5 6 7 8 9” and press IRIS OPEN to enter. And move the joystick again to select numbers of dome ID and press IRIS OPEN to confirm. The number selected will be input on the upper line.

2) Move the cursor to INPUT (the bottom menu) and press IRIS OPEN to enter the mode of setting soft address, Move the joystick to position the cursor beside :0 1 2 3 4 5 6 7 8 9” and press IRIS OPEN to enter. And move the joystick again to select numbers of dome soft address and press IRIS OPEN to confirm. The number selected will be input on the upper line.

3) Enable or disable the soft address function. Press IRIS CLOSE to exit last step. Move the cursor to to “SOFTADDRESS:ON/OFF”. Press iris open to enter. Move the joystick up or down to select ON of OFF. Press IRIS OPEN to confirm.

4) Press OK to save and confirm all the settings and press CANCEL to exit all the settings.

AUX

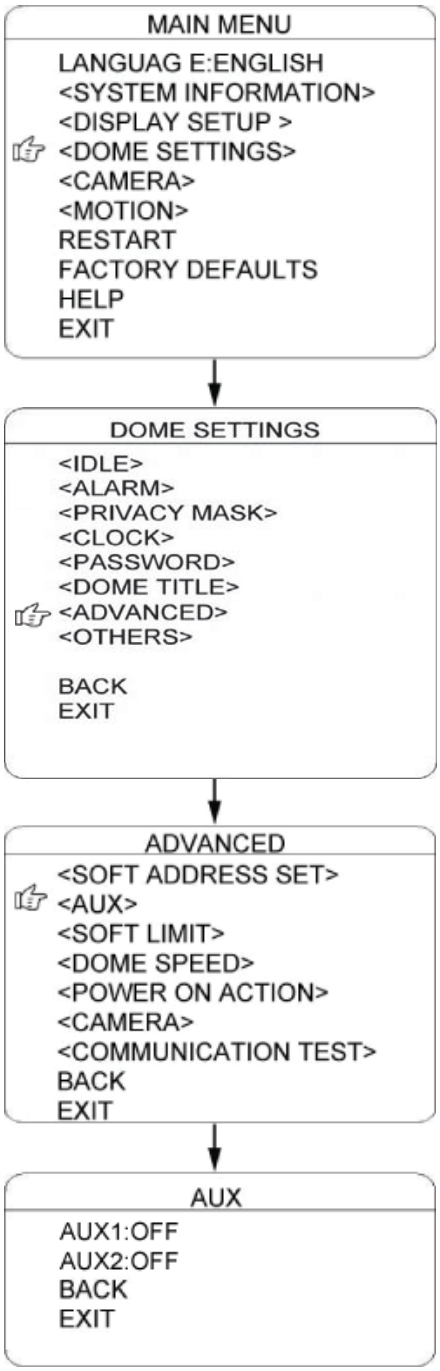

The user can set up the auxiliary output to trigger other devices from an alarm or a controller.

Move the cursor to AUX and press IRIS OPEN to enter to select “ON” or “OFF” to enable or disable this function.

SOFT LIMIT

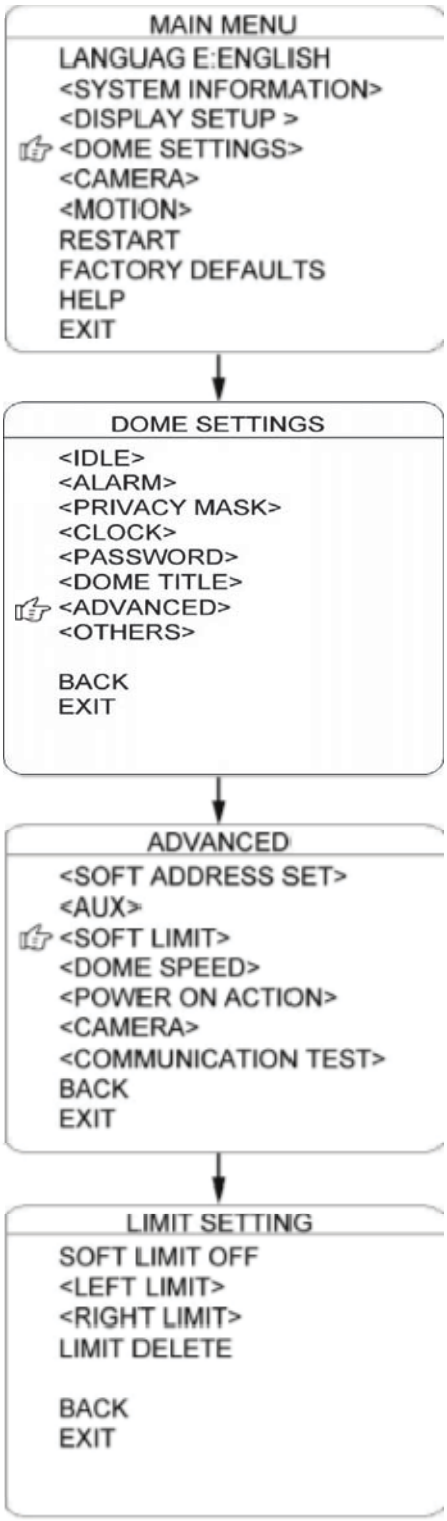

The user can set up the soft limit to define the left and right boundaries for the pan movement.

SOFT LIMIT: Move the cursor here and press IRIS OPEN to enter. Move the joystick to select **"ON" or "OFF" to enable or disable this function.**

LEFT LIMIT: Move the cursor here and press IRIS OPEN to enter. Now the user can mover the joystick to control the PAN movement of the dome to a defined position for the left limit. Press IRIS OPEN to confirm.

RIGHT LIMIT: Move the cursor here and press IRIS OPEN to enter. Now the user can mover the joystick to control the PAN movement of the dome to a defined position for the right limit. Press IRIS OPEN to confirm.

LIMIT DELETE: Move the cursor here and press IRIS OPEN to delete all the settings.

DOME SPEED

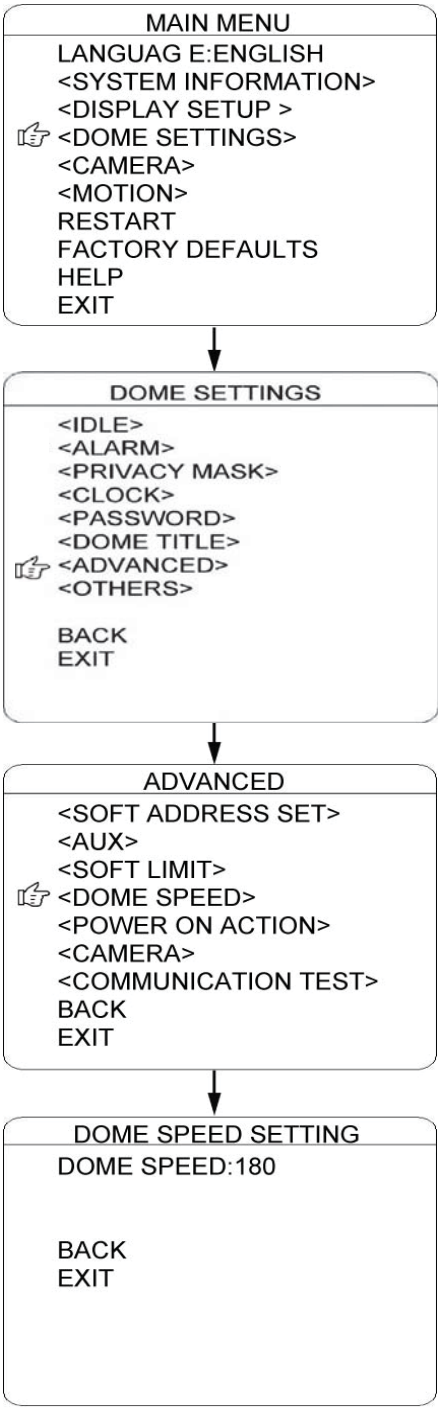

To make a selection of the dome speed, the user can enter this menu to set up.

Move the cursor to DOME SPEED and press IRIS OPEN to enter. Move the joystick to select the dome speed when doing the pan movement.

Move the cursor to BACK/EXIT and press IRIS OPEN to run the command of BACK or EXIT.

POWER ON ACTION

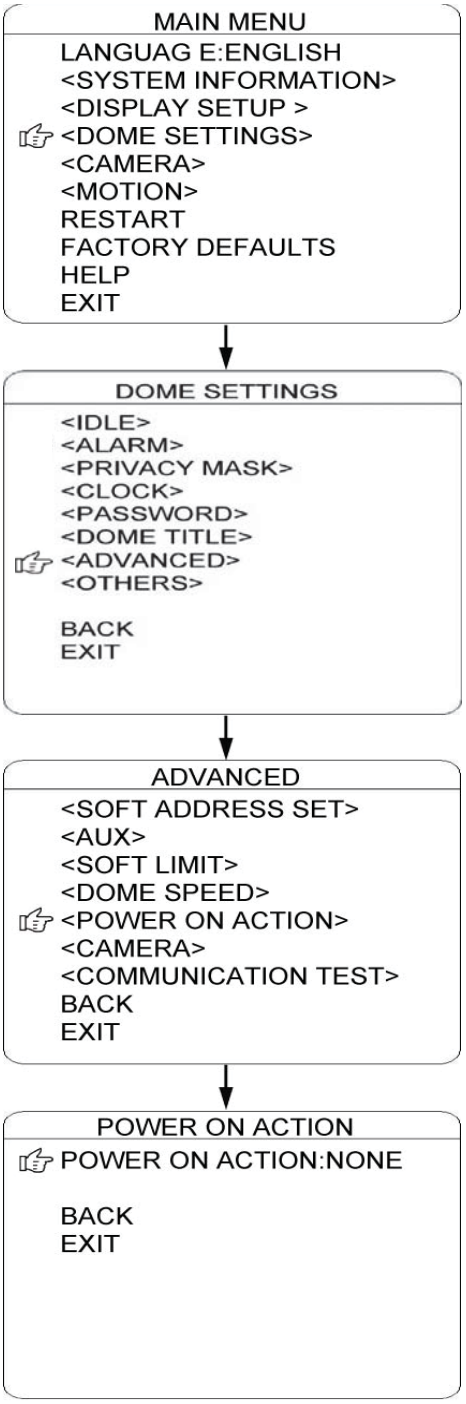

The user can define the dome action when power on,

Move the cursor to POWER ON ACTION and press IRIS OPEN to enter the mode of setup.

NONE	(default) No action.
PRESET	Dome goes to preset. (Default as Preset 1)
SCAN	Dome starts auto scan (Default as Auto Scan 1)
SEQ	Dome runs auto cruise (Default as Auto Cruise 1)
PATTERN	Dome runs pattern (Default as Pattern 1)

CAMERA

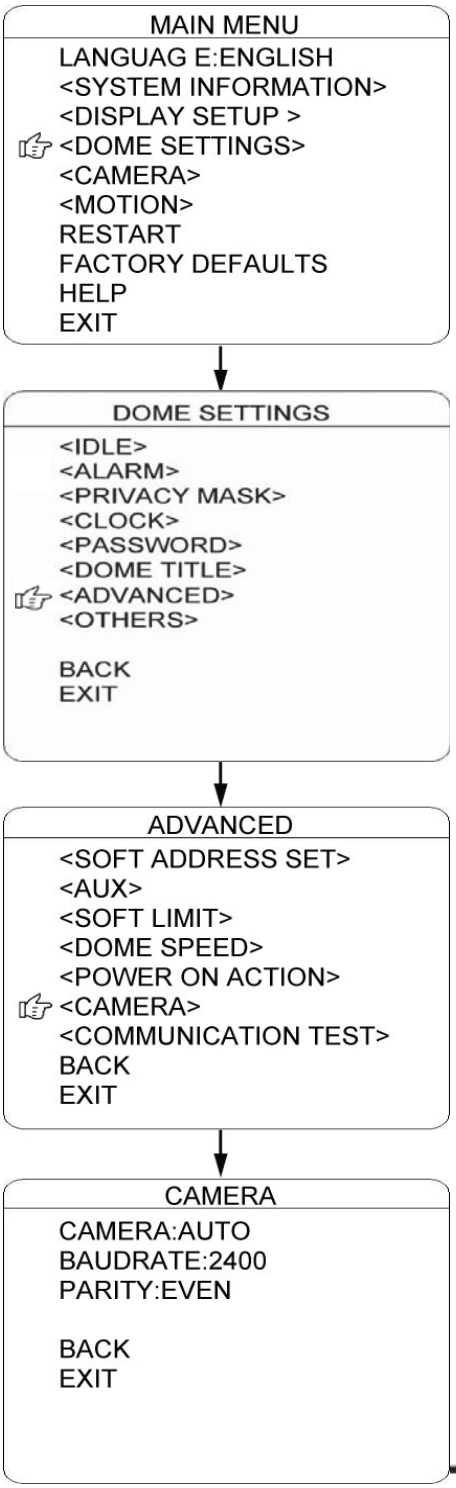

The dome can automatically recognize the main camera modules in the market. For the cameras it can not recognize, the user can set up here.

CAMERA: Move the cursor here and press IRIS OPEN to enter the setup mode. Move the joystick up and down to select the camera types. Press IRIS OPEN to confirm.

BAUDRATE: Move the cursor here and press IRIS OPEN to enter the setup mode. Move the joystick up and down to select the baud rate. Press IRIS OPEN to confirm.

PARITY: Move the cursor here and press IRIS OPEN to enter the setup mode. Move the joystick up and down to select the parity mode. Press IRIS OPEN to confirm.

COMMUNICATION TEST

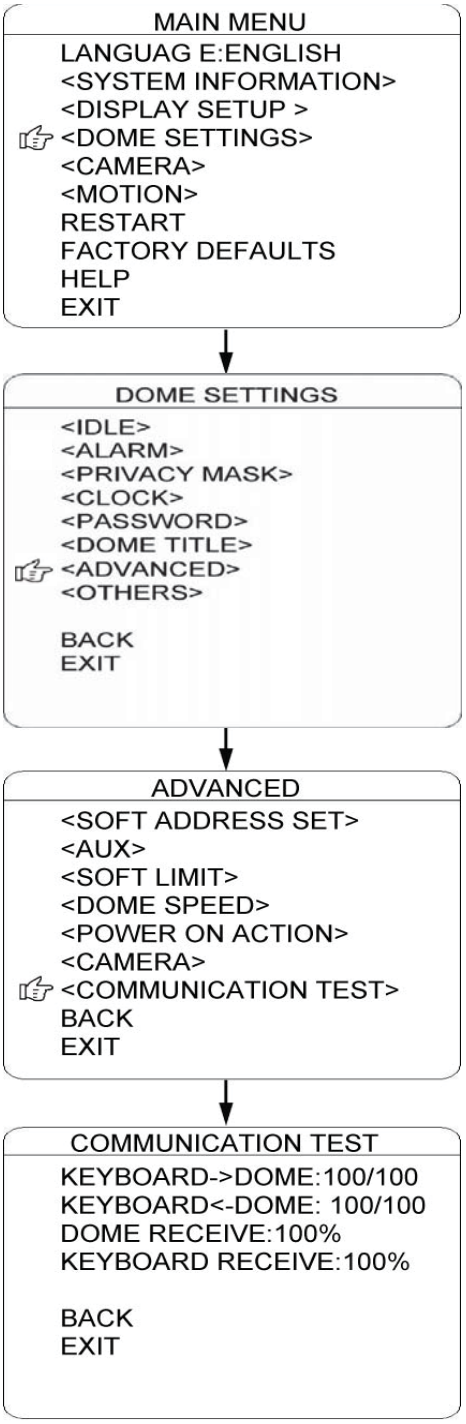

The dome can do self diagnosis for the communications between keyboard and speed dome. The test needs to match with our software VK200.

If the self testing is successfully finished via the software, the system will show up the testing results as left diagram.

OTHERS

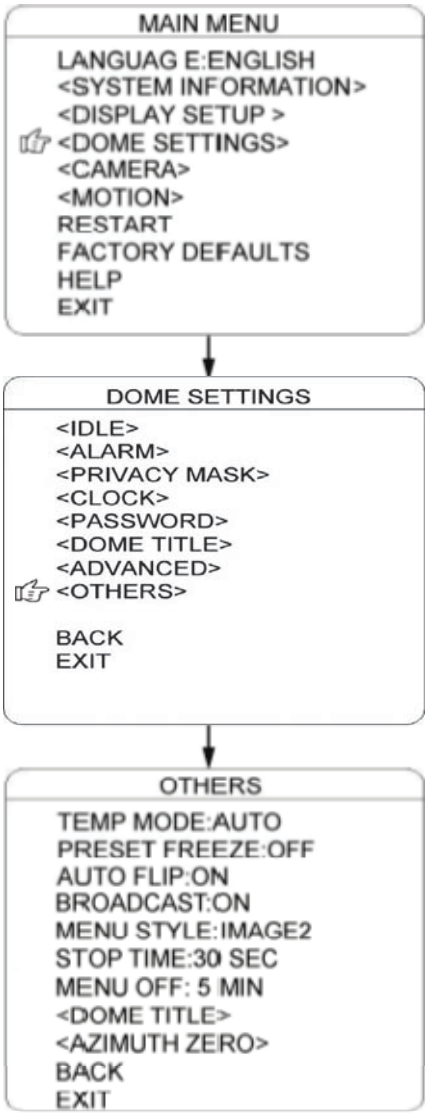

The user can set up TEMP MODE, INTERNAL FAN, PRESET FREEZE, STOP TIME. MENU OFF TIME and NORTH ZERO here under the menu of “OTHERS”

TEMP MODE: To set up the control mode of dome fans and heaters. It includes three modes of AUTO, FAN HIGH SPEED and FAN LOW SPEED.

PRESET FREEZE: This feature freezes the scene on the monitor when going to a preset. This allows smooth switching from one preset scene to another.

AUTO FLIP: When the camera tilts downward and goes just beyond the vertical position, the camera will rotate 180 degrees. The user can press IRIS OPEN to enter and choose to turn on/off this function.

STOP TIME: To set up the time that dome will stops after receiving the last command. Options include 5/15/30/60 Sec.

MENU OFF TIME: To set up the time that OSD menu be off when no operations. Options include 1/2/5/10 min.

NORTH ZERO: To set up the due north of the dome (pan 0°) Move the cursor here and press IRIS OPEN to enter. Move the joystick to control the dome to pan 0° and press IRIS OPEN to confirm.

CAMERA

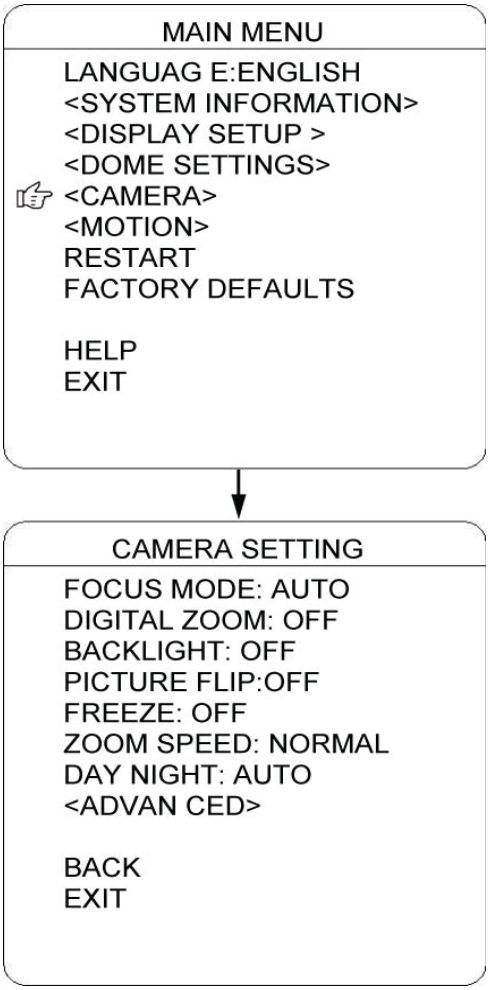

The user can make adjustment for the cameras under this menu.

FOCUS MODE: AUTO FOCUS allows the camera lens to remain in focus during zooming in, zooming out and pan/tilt movement. Move the cursor here and press IRIS OPEN to enter. Setup the mode: AUTO" or "OFF" and press IRIS OPEN to confirm. When auto focus is off, the user needs to do manual focus.

DIGITAL ZOOM: Move the cursor here and press IRIS OPEN to enter. Setup the function to be "ON" or "OFF".

BACKLIGHT: Move the cursor here and press IRIS OPEN to enter. Setup the function to be "ON" or "OFF".

PICTURE FLIP: To set up the Tilt flip for the dome. Move the cursor here and press IRIS OPEN to enter. Setup the function to be "ON" or "OFF".

FREEZE: If turn on this function, the screen image will be frozen until it is turned off. Move the cursor here and press IRIS OPEN to enter. Setup the function to be "ON" or "OFF".

ZOOM SPEED: To set up the zoom speed of Low, Normal and high when doing the zoom in and out. Move the cursor here and press IRIS OPEN to enter. Move the joystick to choose and press IRIS OPEN to confirm

DAY NIGHT: To set up the day and night mode of AUTO, CLOUR and B/W. Move the cursor here and press IRIS OPEN to enter. Move the joystick to choose and press IRIS OPEN to confirm

CAMERA ADVANCED

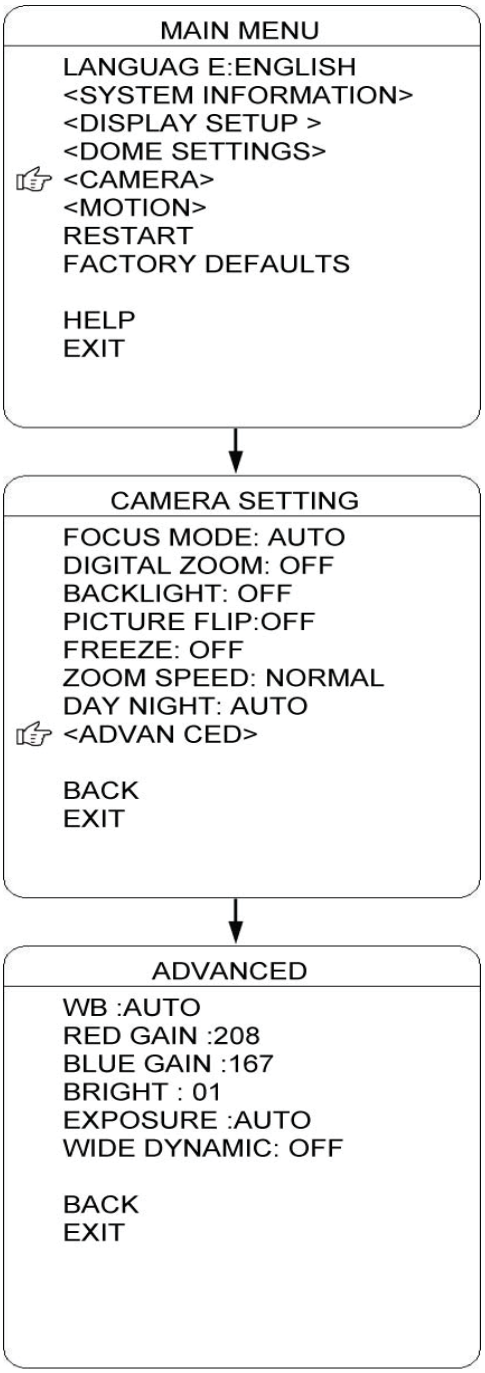

The use can set up more detailed parameters of camera here under the menu of CAMERA ADVANCED.

WB: To set up the white balance of the camera. Options include AUTO, MANUAL. INDOOR and OUTDOOR. The use can select different mode according the different locations.

RED GAIN: Only can be adjusted whet WB set as manual.

BLUE GAIN: Only can be adjusted whet WB set as manual.

BIRGHT: To set up the brightness of the image. Move the cursor here and press IRIS OPEN to enter. Move the joystick to adjust and press IRIS OPEN to confirm

EXPOSURE: To set up the exposure mode of the camera. Options include AUTO, MANUAL, SHUTTER PRIORITY, IRIS PRIORITY and BRIGHT PRIORITY. The use can select different mode according the different locations.

WIDE DYNAMIC: Wide dynamic range (WDR) balances the brightest and darkest sections of a scene to produce a picture that is perfectly balanced in light and clarity. Available settings are OFF.LOW.MID and HIGH. The default setting is OFF.

PRESET

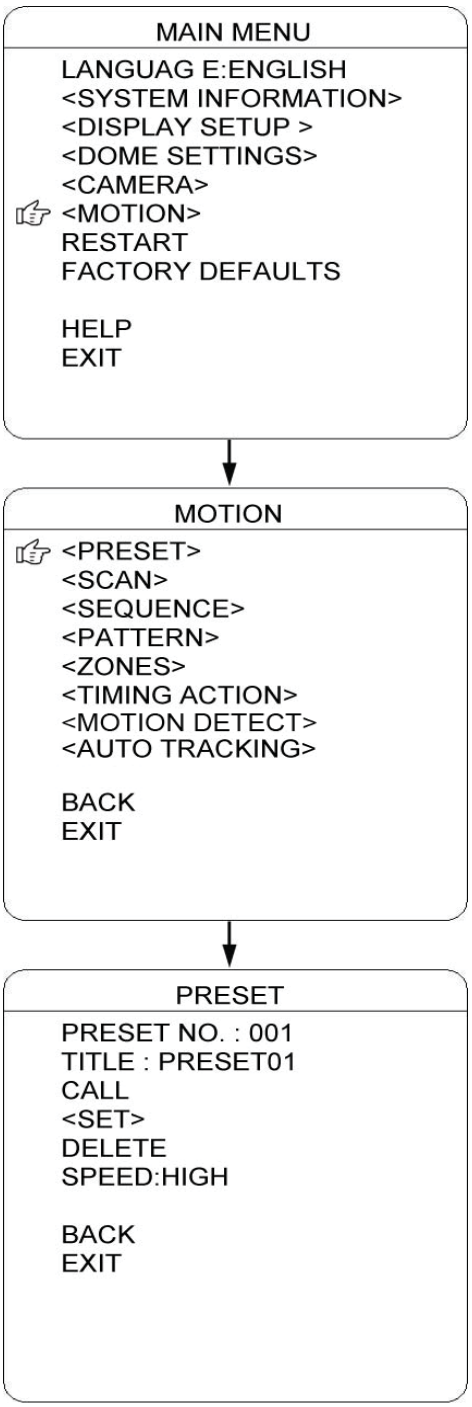

The dome supports 220 presets. Please check the following steps to set up a preset.

1) PRESET NO.: Move the cursor here and press IRIS OPEN to enter the setup of Preset Number. Move the joystick to select a preset number (1-64 and 100-255) and press IRIS OPEN to confirm.

2) TITLE: Move the cursor here and press IRIS OPEN to enter the setup of Preset Title. Check the detailed above in DOME TITLE settings.

3) <SET>: Move the cursor here and press IRIS OPEN to enter. Move the dome to a defined position as preset point and press IRIS OPEN to save the preset position.

4) CALL: Move the cursor here and press IRIS OPEN to call up the current preset.

5) DELETE: Move the cursor here and press IRIS OPEN to delete the current preset.

6) SPEED: Move the cursor here and press IRIS OPEN to set up the preset call up speed of LOW, MID and HIGH.

AUTO SCAN

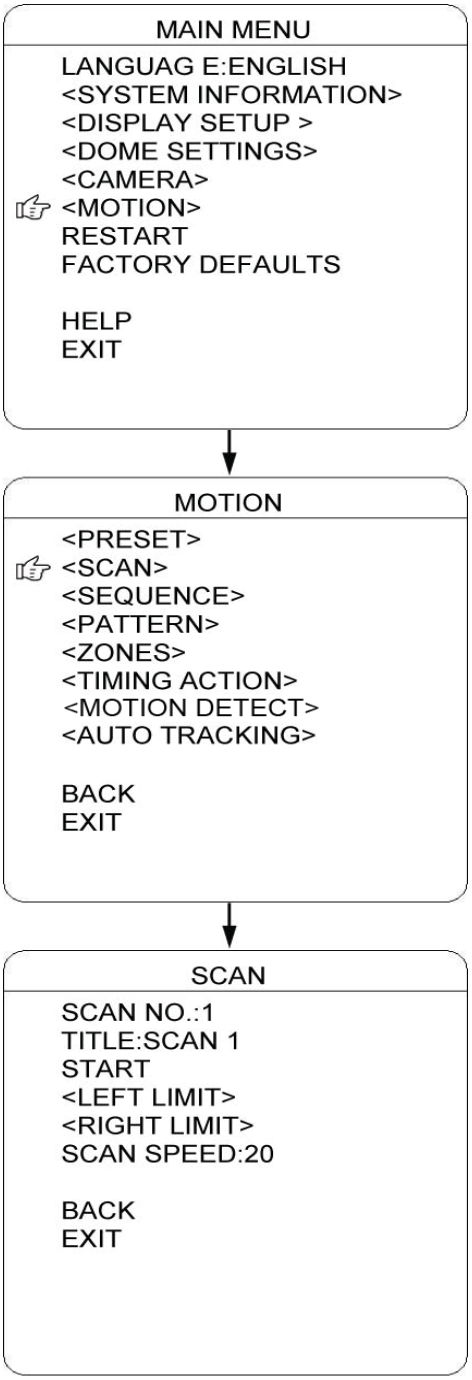

The dome supports 8 groups of auto scan. Please check the following steps to set up a scan.

1) SCAN NO.: Move the cursor here and press IRIS OPEN to enter the setup of SCAN Number. Move the joystick to select a preset number (1-8) and press IRIS OPEN to confirm.

2) TITLE: Move the cursor here and press IRIS OPEN to enter the setup of SCAN Title. Check the detailed above in DOME TITLE settings.

3) <LEFT LIMIT>: Move the cursor here and press IRIS OPEN to enter. Move the dome to a defined position as left limit and press IRIS OPEN to save this left boundary.

4) <RIGHT LIMIT>: Move the cursor here and press IRIS OPEN to enter. Move the dome to a defined position as right limit and press IRIS OPEN to save this right boundary.

5) START: Move the cursor here and press IRIS OPEN to start the current scan.

6) SCAN SPEED: Move the cursor here and press IRIS OPEN to set up the scan speed ranging 1-30.

AUTO CRUISE (SEQUENCE)

```
MAIN MENU
   LANGUAG E:ENGLISH
   <SYSTEM INFORMATION>
   <DISPLAY SETUP >
   <DOME SETTINGS>
   <CAMERA>
☞  <MOTION>
   RESTART
   FACTORY DEFAULTS
   HELP
   EXIT
```

```
MOTION
   <PRESET>
   <SCAN>
☞  <SEQUENCE>
   <PATTERN>
   <ZONES>
   <TIMING ACTION>
   <MOTION DETECT>
   <AUTO TRACKING>
   BACK
   EXIT
```

```
SEQUENCE
   SEQ NO.: 1
   TITLE: SEQ 1
   START
☞  <SEQUENCE SET>
   DELETE

   BACK
   EXIT
```

```
SEQUENCE
   NO.     PESET     INTERVAL
>>01       002         03
   02      001         03
   03      - - -       - -
   04      - - -       - -
   05      - - -       - -
   06      - - -       - -
☞EDIT 01  003    03    INS

   BACK                EXIT
```

The dome supports 8 groups of auto cruise and each cruise supports 32 presets. . Please check the following steps to set up cruise.

1) SEQ NO.: Move the cursor here and press IRIS OPEN to enter the setup of Sequence Number. Move the joystick to select a preset number (1-8) and press IRIS OPEN to confirm.

2) TITLE: Move the cursor here and press IRIS OPEN to enter the setup of Sequence Title. Check the detailed above in DOME TITLE Settings.

3) <SEQUENCE SET>: Move the cursor here and press IRIS OPEN to enter. Move the cursor to EDIT and press IRIS OPEN enter edit mode of sequence. Move the joystick left and right to select each item.

   a) When the < > is on the item NO., move joystick up or down to select the Serial NO. of the preset in a sequence. There are up to 32 presets in each sequence.
   b) When the < > is on the item PRESET, move the joystick up or down to select the preset NO. that the user wants to add in the sequence.
   c) When the < > is on the INTERVAL, move the joystick up or down to select the interval time between each preset.
   d) When the < > is on the last item, move the joystick up or down to select edition mode as “INS (insert)”, “ok” and “delete”.

   Press IRIS OPEN when selecting INS to insert the settings into the position of current Serial No.
   Press IRIS OPEN when selecting OK to override the settings of Current Serial No.
   Press IRIS OPEN when selecting delete to delete the settings of the Current Serial No.
   Press IRIS OPEN to save all the setting and press IRIS CLOSE to exit.

4) DELETE/START: Move the cursor here and press IRIS OPEN to delete/start the current sequence.

PATTERN TOUR

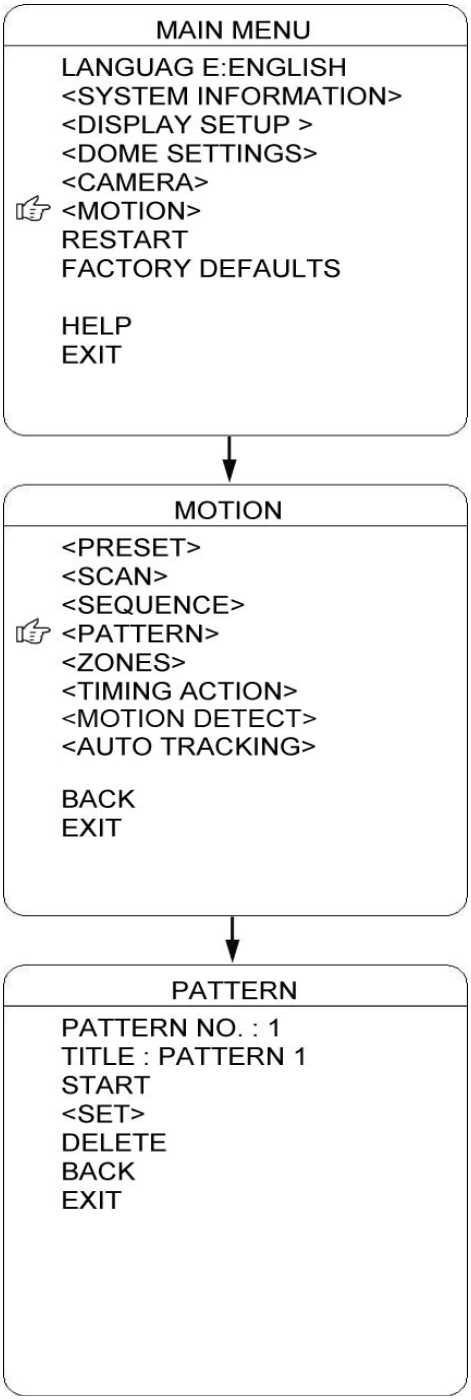

The dome supports 4 pattern tours and each pattern cover at most 10 Minutes of 500 commands. Please check the following steps to set up a pattern.

1) PATTERN NO.: Move the cursor here and press IRIS OPEN to enter the setup of Pattern Number. Move the joystick to select a pattern number (14) and press IRIS OPEN to confirm.

2) TITLE: Move the cursor here and press IRIS OPEN to enter the setup of Pattern Title. Check the detailed above in DOME TITLE settings.

3) <SET>: Move the cursor here and press IRIS OPEN to enter. Move the dome up/down/left right, make the zoom in/out and press IRIS OPEN to save the pattern tour.

4) START: Move the cursor here and press IRIS OPEN to start the current pattern tour.

5) DELETE: Move the cursor here and press IRIS OPEN to delete the current pattern tour.

ZONES

```
MAIN MENU
   LANGUAG E:ENGLISH
   <SYSTEM INFORMATION>
   <DISPLAY SETUP >
   <DOME SETTINGS>
   <CAMERA>
☞  <MOTION>
   RESTART
   FACTORY DEFAULTS

   HELP
   EXIT
```

↓

```
MOTION
   <PRESET>
   <SCAN>
   <SEQUENCE>
   <PATTERN>
☞  <ZONES>
   <TIMING ACTION>
   <MOTION DETECT>
   <AUTO TRACKING>

   BACK
   EXIT
```

↓

```
ZONES
   ZONE IS NOT SET
   ZONE NO. : 1
   TITLE: ZONE 1
   <LEFT LIMIT>
   <RIGHT LIMIT>
   DELETE

   BACK
   EXIT
```

The use can set up zone title when the camera moves to a defined location, which will make it much easier for the user to identify the location. The dome supports 8 zone titles. Please check the following steps to set up a zone

1) ZONE NO.: Move the cursor here and press IRIS OPEN to enter the setup of Zone Number. Move the joystick to select a zone number (1-8) and press IRIS OPEN to confirm.

2) TITLE: Move the cursor here and press IRIS OPEN to enter the setup of Zone Title. Check the detailed above in DOME TITLE settings.

3) <LEFT LIMIT>: Move the cursor here and press IRIS OPEN to enter. Move the dome to a defined position as left limit and press IRIS OPEN to save this left boundary.

4) <RIGHT LIMIT>: Move the cursor here and press IRIS OPEN to enter. Move the dome to a defined position as right limit and press IRIS OPEN to save this right boundary.

5) DELETE: Move the cursor here and press IRIS OPEN to delete the current zone.

TIMING ACTION

MAIN MENU

LANGUAG E:ENGLISH
<SYSTEM INFORMATION>
<DISPLAY SETUP >
<DOME SETTINGS>
<CAMERA>
☞ <MOTION>
RESTART
FACTORY DEFAULTS

HELP
EXIT

↓

MOTION

<PRESET>
<SCAN>
<SEQUENCE>
<PATTERN>
<ZONES>
☞ <TIMING ACTION>
<MOTION DETECT>
<AUTO TRACKING>

BACK
EXIT

↓

TIMING ACTION

NO.	START	STOP	MOTION
1	00:00	00:00	NONE
2	00:00	00:00	NONE
3	00:00	00:00	NONE
4	00:00	00:00	NONE
5	00:00	00:00	NONE
6	00:00	00:00	NONE
7	00:00	00:00	NONE
8	00:00	00:00	NONE

OFF MON COPY BACK

TIMING ACTION allows the user to set up the actions of the dome in 7 days (each day with 8 timing segments). When fishing the setup, the dome will do the actions according to the setup motion during the defined time segment.

NO.: Here shows the day within a week. Move the cursor here and press IRIS OPEN to enter. Move joystick up or down to select the Serial No. (1-8) for the timing action. Press IRIS OPEN to confirm.

START: To set up the start time for the defined motion within this time segment. Press IRIS OPEN to confirm.

STOP: To set up the stop time for the defined motion within this time segment. Press IRIS OPEN to confirm.

MOTION: To setup the motion that will be operated in this time segment. The motion includes: NONE. PRESET 1-8, SCAN 1-4, SEQUENCE 1-4 and PATTERN 1-4.

ON/OFF: Move the cursor here and press IRIS OPEN to enter to enable or disable this function. Press IRIS OPEN to confirm.

COPY: The user could set up each 8 segment of 7 days separately or can copy the finished setting for one day to the current day. Move the cursor there and press IRIS OPEN to copy the settings.

BACK: Press IRIS OPEN to save and be back to last menu.

NOTE: It is not allowed to set up the same time segment during one day. And the time segment can not exceed 00:00. During the timing action segment, the defined action will be stopped if the user moves the dome. If there is operation during the defined time segment, the action will re-activated as long as it is in the defined timing action segment.

MOTION DETECT

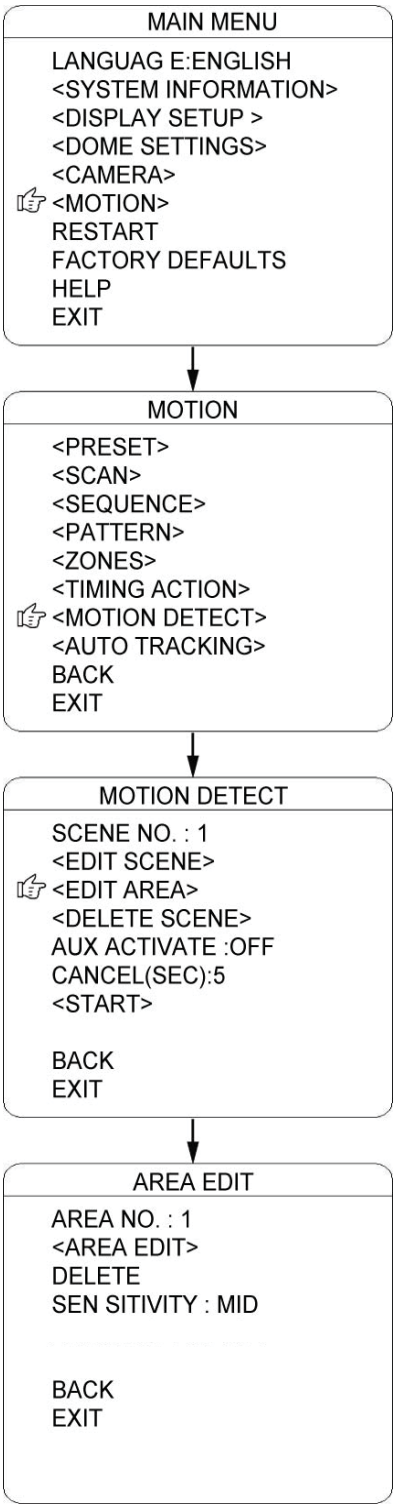

The user can set up 8 motion detection scenes (each scene with 4 detecting areas) under this menu. The alarm output will be triggered when moving objects enter these detecting areas

SCENE NO.: Move the cursor here and press IRIS OPEN to enter the setup of Scene Number. Move the joystick to select a preset number (1-8) and press IRIS OPEN to confirm.

<EDIT SCENE>: Move the cursor here and press IRIS OPEN to enter. Move the dome to a user-defined detecting scene. Press IRIS OPEN to confirm.

<EDIT AREA>: Move the cursor here and press IRIS OPEN to enter the menu of AREA EDIT.

a) AREA NO.: Move the cursor here and press IRIS OPEN to enter the setup of AREA Number. Move the joystick to select a preset number (1-4) and press IRIS OPEN to confirm.
b) <AREA EDIT>: Move the cursor here and press IRIS OPEN to enter the setup of AREA EDIT. The screen will display frame with Serial No. The user can move the frame to the top left conner of the wanted detecting area and press IRIS OPEN to confirm. Then move the joystick to adjust the size of the detecting area and press IRIS OPEN to confirm
c) DELETE: Move the cursor here and press IRIS OPEN to delete the current detecting area.
d) SENSITIVITY: Move the cursor here and press IRIS OPEN to enter. Select among LOW. MID and HIGH and press IRIS OPEN to confirm the sensitivity.
e) DELETE SCENE: Move the cursor here and press IRIS OPEN to delete the current scene.
f) AUX ACTIVATE: The dome can activate the alarm aux output when detecting the moving object. Press IRIS OPEN to enter and select between “ON” and “OFF” to activate or deactivate this function.
g) CANCEL (SEC): Here means when the alarm aux output is activated by the detecting function, for how long it will last before the aux output will be closed. The time ranging 1-60 Sec.
h) START: Move the cursor here and press IRIS OPEN to start the function of motion detection.

AUTO TRACKING (ONLY AUTO TRACKING MODEL)

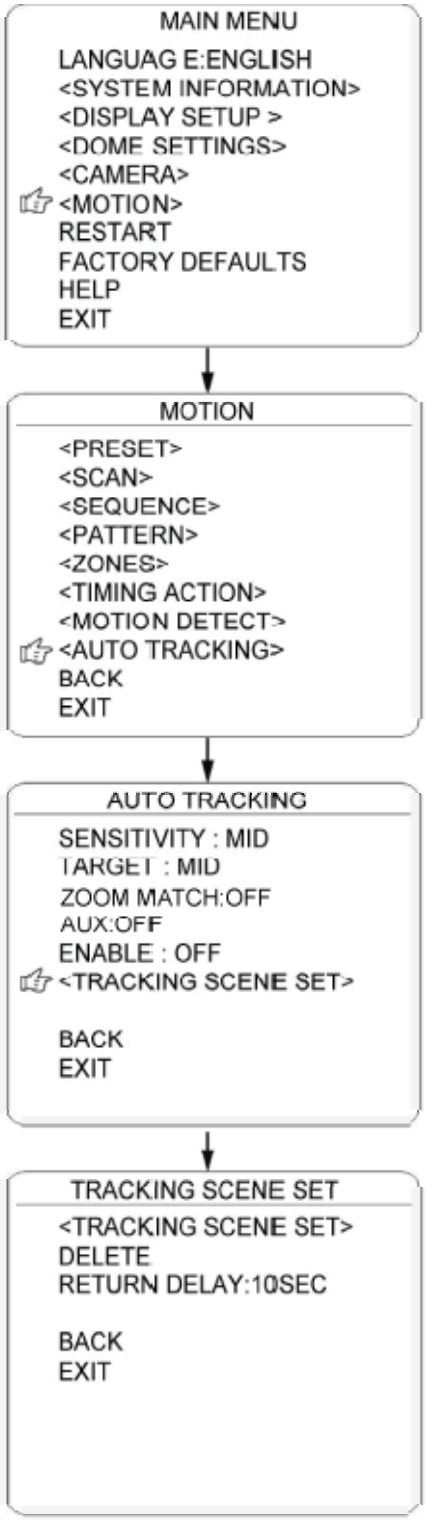

Under the auto tracking mode, the dome will auto track the moving objects entering the scene. When the object is moving out of the scene, the dome will return to a preset position as defined after the defined time.

SENSITIVITY: The user can set up the auto tracking sensitivity under this menu. When set as LOW, the dome will do auto tracking when obvious object entering the screen. When set as HIGH, the dome will do auto tracking when small object moving into the screen. Move the cursor there and press the IRIS OPEN to enter. The options include: LOW, MID and HIGH.

TARGET: To set up the size of the tracking object. The options include Large. MID and SMALL.

AUX: If set “ON” here, the object auto tracking will activate alarm aux output at the same time. Press IRIS OPEN to enter to select “ON” or “OFF”

ZOOM MATCH: Under the auto tracking model, if turn on the function of ZOOM MATCH, the dome will do zooming in and out during auto tracking to keep the right proportion between the object and background. Move the cursor there and press the IRIS OPEN to enter. And move the joystick to select the optical zoom.

ENABLE: **Move the cursor here and press IRIS OPEN to enter to select “ON” or “OFF” to enable or disable this function.**

TRACKING SCENE SET: Here the user can set up the scene that the dome will get back to when finishing the action of auto tracking. Move the cursor here and press IRIS OPEN to enter. Move the dome to the wanted scene and press IRIS OPEN to confirm.

DELETE: Move the cursor here and press IRIS OPEN to delete the return scene.

RETURN DELAY: To set up the time that dome will waiting to return to this scene.

RESTART

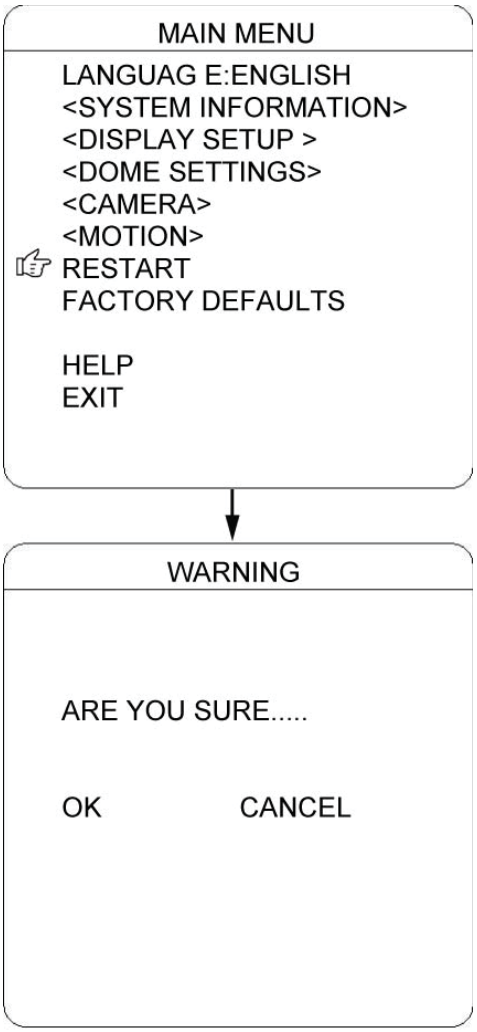

The dome allows the user to reset its settings remotely under this menu.

Move the cursor here and press IRIS OPEN to enter.
Select “OK” or “CANCEL” to continue the reset or cancel the reset.

FACTORY DEFAULTS

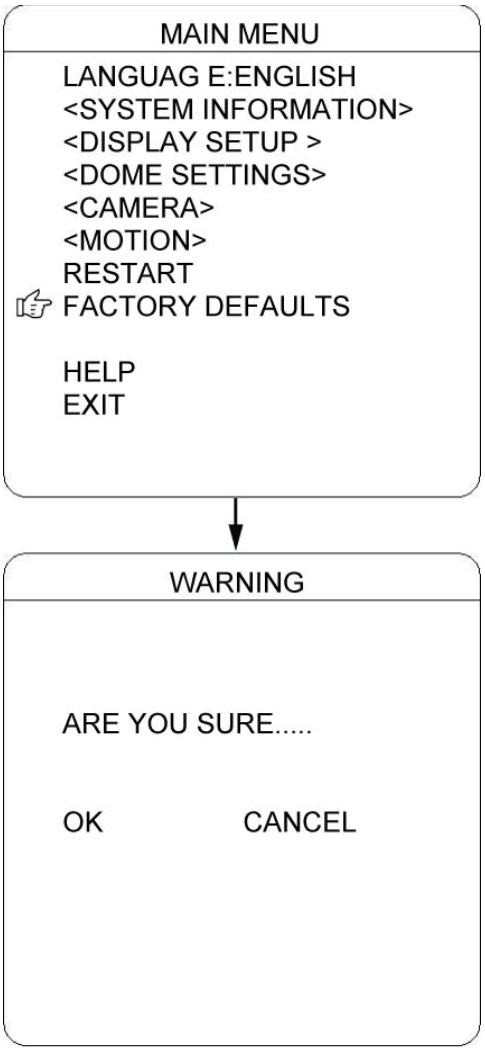

FACTORY DEFAULTS will allow the user to recover all the setting to factory default setting.

Move the cursor here and press IRIS OPEN to enter.
Select “OK” or “CANCEL” to continue the reset or cancel the reset.

HELP

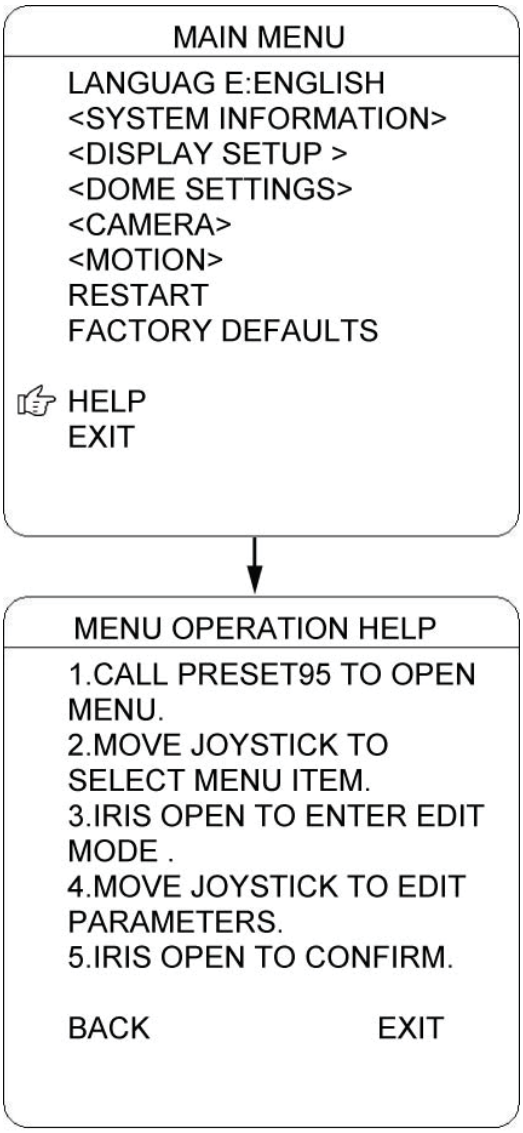

Help shows some operation info for the user to manage the OSD menu.

Move the cursor here and press IRIS OPEN to check the help information.